2-way flow control valve

Type 2FRM

RE 28163
Edition: 2015-07
Replaces: 02.09

H5851+5852

- Size 6
- Component series 3X
- Maximum operating pressure 315 bar
- Maximum flow 32 l/min

Features

- Porting pattern according to DIN 24340 form A
- External closing of the pressure compensator, optional
- As threaded connection for control panel installation with connection thread G3/8
- Check valve, optional
- 2 adjustment types, optionally:
  - Rotary knob with scale
  - Lockable rotary knob with scale

Contents

Ordering code: 2-way flow control valve

01	02	03	04	05		06		07	08	09	10
2FRM	**6**			**6**	**–**	**3X**	**/**				*****

01	2-way flow control valve	**2FRM**

02	Size 6	**6**

03	**With** closing of the pressure compensator (suppression of the start-up jump)	**A**
	Without closing of the pressure compensator	**B**
	Without closing of the pressure compensator – **for control panel installation**	**SB**

Adjustment type

04	Lockable rotary knob with scale [1]	**3**
	Rotary knob with scale	**7**

05	Zero position of the marking at port P	**6**

06	Component series 30 ... 39 (30 ... 39: Unchanged installation and connection dimensions)	**3X**

Flow (A → B)

07	up to 0.2 l/min	**0.2Q**
	up to 0.6 l/min	**0.6Q**
	up to 1.5 l/min	**1.5Q**
	up to 3.0 l/min	**3Q**
	up to 6.0 l/min	**6Q**
	up to 10.0 l/min	**10Q**
	up to 16.0 l/min	**16Q**
	up to 25.0 l/min	**25Q**
	up to 32.0 l/min	**32Q**

08	**With** check valve	**R**
	Without check valve	**M**

Seal material

09	NBR seals	**no code**
	FKM seals	**V**
	Observe compatibility of seals with hydraulic fluid used! (Other seals upon request)	

10	Further details in the plain text	*****

[1] Key with the material no. **R900008158** is included in the scope of delivery.

☞ **Notice:** Preferred types and standard units are contained in the EPS (standard price list).

Ordering code: Rectifier sandwich plate (only version "B")

01	02		03		04	05
Z4S	**6**	**–**	**1X**	**/**		*****

01	Rectifier sandwich plate	**Z4S**
02	Size 6	**6**
03	Component series 10 ... 19 (10 ... 19: Unchanged installation and connection dimensions)	**1X**

Seal material

04	NBR seals	**no code**
	FKM seals	**V**
	Observe compatibility of seals with hydraulic fluid used! (Other seals upon request)	
05	Further details in the plain text	*****

Symbols: 2-way flow control valves

	Simplified	**Detailed**
Without check valve; **without** external closing Type 2FRM 6 B...M... Type 2FRM 6 SB...M...	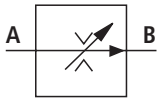	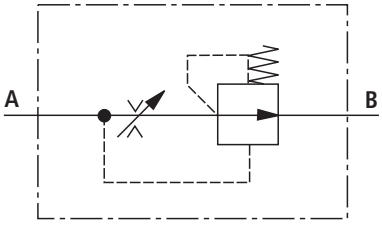
With check valve; **without** external closing Type 2FRM 6 B...R... Type 2FRM 6 SB...R...	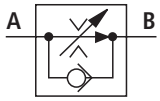	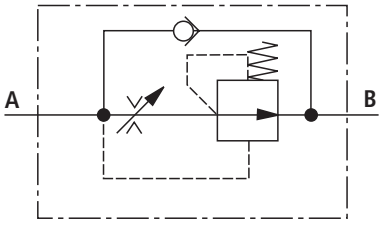
Without check valve; **with** external closing Type 2FRM 6 A...M...	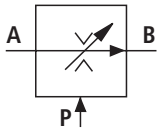	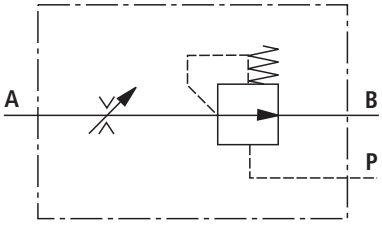
With check valve; **with** external closing Type 2FRM 6 A...R...	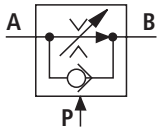	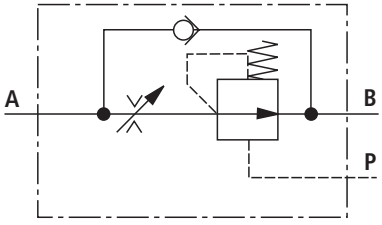

Symbol: Rectifier sandwich plate (① = component side, ② = plate side)

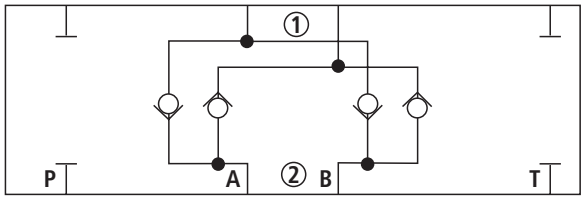

Function, section: Type 2FRM 6 **B**...

General
The flow control valve type 2FRM is a 2-way flow control valve. It is used for maintaining a constant flow, independent of pressure and temperature.
The valve basically comprises a housing (1), a rotary knob (2), orifice bush (3), pressure compensator (4) and an optional check valve.

Version "B" ... "M"
(**without** external closing, **without** check valve)
The flow from channel A to B is throttled at the throttling point (5). The throttle cross-section is set by turning the rotary knob (2).
In order to keep the flow in channel B constant, independent of the pressure, a pressure compensator (4) is fitted downstream of the throttling point (5).
The compression spring (6) presses the pressure compensator (4) downwards against its stop and keeps the pressure compensator (4) in the open position when there is no flow through the valve. When fluid flows through the valve, the pressure acting in channel A applies a force to the pressure compensator (4) via nozzle (7).
The pressure compensator (4) moves into the controlled position until the forces balance. If the pressure in channel A rises, the pressure compensator (4) moves in the closing direction until a balance of forces is once again attained. Due to this continuous compensation of the pressure compensator (4), a constant flow is obtained.
In order to control a flow through the valve in both directions, a rectifier sandwich plate type Z4S 6 may be fitted below this flow control valve.

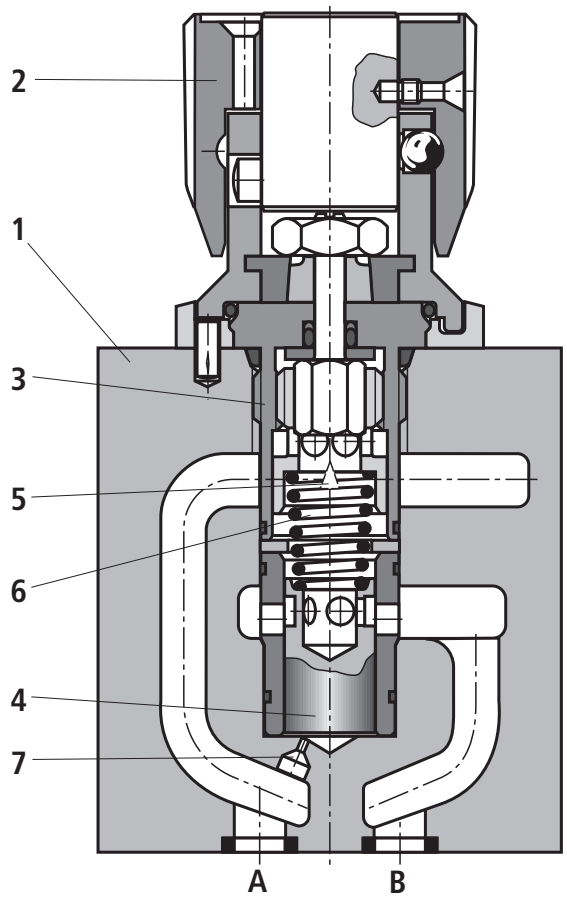

Type 2FRM 6 B76-3X/.M...

Function, section, circuit example: Type 2FRM 6 **A**...

General

The flow control valve type 2FRM is a 2-way flow control valve.
It is used for maintaining a constant flow, independent of pressure and temperature.
The valve basically comprises a housing (1), a rotary knob (2), orifice bush (3), pressure compensator (4) and an optional check valve (8).

Version "A" ... "R"

(**with** external closing, **with** check valve)
In principle, the function of this valve corresponds to the function of version "B" ... "M".
However, the flow control valve is provided with the possibility of an external closing of the pressure compensator (4) via channel P (9). The external pressure acting in channel P (9) via nozzle (10), holds the pressure compensator (4) in closed position against the compression spring (6). When the connected directional valve (11) is switched over to permit flow from P to B, control is achieved as with type "B". Thus, a start-up jump is avoided. This version can only be used for the supply control.
The free return flow from channel B to A is via the check valve (8).

☞ **Notice:**
The pressure loss of port P upstream of the directional valve to port A upstream of the flow control valve makes itself felt by a reduced flow.

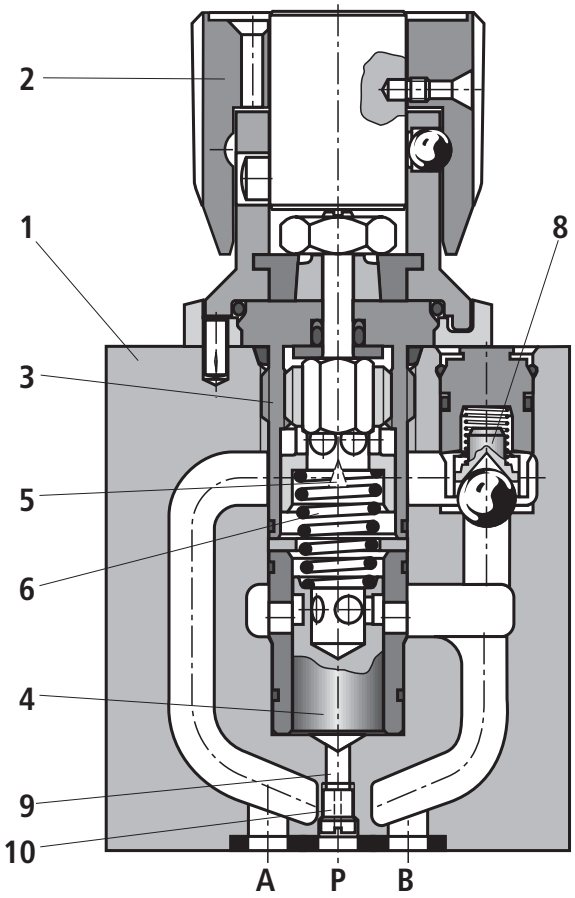

Type 2FRM 6 A76-3X/..RV

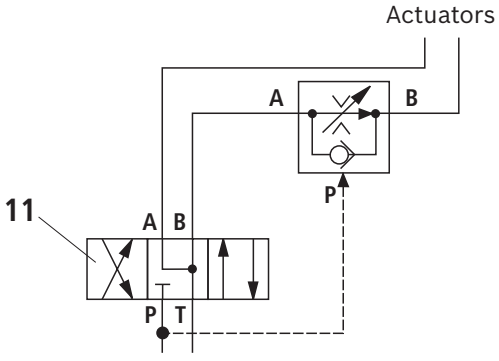

Function, section: Type 2FRM 6 **SB**...

General
The flow control valve type 2FRM is a 2-way flow control valve.
It is used for maintaining a constant flow, independent of pressure and temperature.
The valve basically comprises a housing (1), a rotary knob (2), orifice bush (3), pressure compensator (4) and an optional check valve (8).

Version "SB" ... "RV"
(**without** external closing, **with** check valve, with threaded connection **for control panel installation**)
The flow from channel A to B is throttled at the throttling point (5). The throttle cross-section is set by turning the rotary knob (2).
In order to keep the flow in channel B constant, independent of the pressure, a pressure compensator (4) is fitted downstream of the throttling point (5).
The compression spring (6) presses the pressure compensator (4) downwards against its stop and keeps the pressure compensator (4) in the open position when there is no flow through the valve. When fluid flows through the valve, the pressure acting in channel A applies a force to the pressure compensator (4) via nozzle (7).
The pressure compensator (4) moves into the controlled position until the forces balance. If the pressure in channel A rises, the pressure compensator (4) moves in the closing direction until a balance of forces is once again attained.
Due to this continuous compensation of the pressure compensator (4), a constant flow is obtained.
The free return flow from channel B to channel A is via the check valve (8).

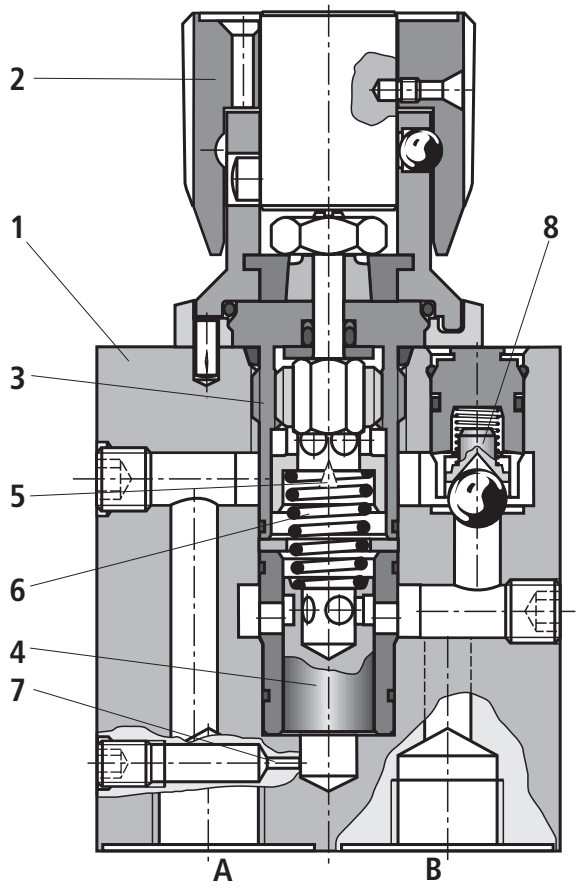

Type 2FRM 6 SB76-3X/..R...

Technical data: 2-way flow control valve
(For applications of the component outside the specified values, please contact us!)

general			
Weight	▶ Version "A" and "B"	kg	Approx. 1.3
	▶ Version "SB"	kg	Approx. 1.5
Installation position			Any
Ambient temperature range		°C	–30 ... +50 (NBR seals) –20 ... +50 (FKM seals)

hydraulic											
Maximum operating pressure (port A)		bar	315								
Pressure differential ***Δp*** with free return flow B → A		bar	See characteristic curves page 9								
Minimum pressure differential		bar	6 ... 14								
Pressure stable up to ***Δp*** = 315 bar		%	±2 ($q_{V\,max}$)								
Maximum flow		l/min	0.2	0.6	1.5	3.0	6.0	10.0	16.0	25.0	32.0
Minimum flow	▶ up to 100 bar	cm^3/min	15	15	15	15	25	50	70	100	250
	▶ up to 315 bar	cm^3/min	25	25	25	25	25	50	70	100	250
Hydraulic fluid			See table below								
Hydraulic fluid temperature range		°C	–30 ... +80 (NBR seals) –20 ... +80 (FKM seals)								
Viscosity range		mm^2/s	10 ... 800								
Maximum permitted degree of contamination of the hydraulic fluid - cleanliness class according to ISO 4406 (c)			Class 20/18/15 [1]								

Hydraulic fluid		**Classification**	**Suitable sealing materials**	**Standards**	**Data sheet**
Mineral oils		HL, HLP	NBR, FKM	DIN 51524	90220
Bio-degradable	▶ insoluble in water	HETG	FKM	ISO 15380	90221
		HEES	FKM		
	▶ soluble in water	HEPG	FKM	ISO 15380	
Flame-resistant	▶ water-free	HFDU	FKM	ISO 12922	90222
	▶ containing water	HFC (Fuchs Hydrotherm 46M, Petrofer Ultra Safe 620)	NBR	ISO 12922	90223

☞ **Important information on hydraulic fluids:**
- ▶ For more information and data on the use of other hydraulic fluids, please refer to the data sheets above or contact us!
- ▶ There may be limitations regarding the technical valve data (temperature, pressure range, life cycle, maintenance intervals, etc.)!
- ▶ The flash point of the hydraulic fluid used must be 50 K higher than the maximum solenoid surface temperature.

- ▶ **Flame-resistant – containing water:**
  - – Maximum operating pressure of 210 bar
  - – Maximum hydraulic fluid temperature 60 °C
  - – Life cycle compared to operation with mineral oil HL, HLP 30 to 100 %

[1] The cleanliness classes specified for the components must be adhered to in hydraulic systems. Effective filtration prevents faults and at the same time increases the life cycle of the components.
Available filters can be found at www.boschrexroth.com/filter.

Technical data: Rectifier sandwich plate
(For applications of the component outside the specified values, please contact us!)

general		
Weight	kg	Approx. 0.9

hydraulic		
Maximum operating pressure	bar	210
Cracking pressure	bar	0.7
Maximum flow	l/min	32

Characteristic curves
(measured with HLP46, ϑ_{Oil} = 40 ± 5 °C)

Flow dependency on the scale setting (flow control A → B)

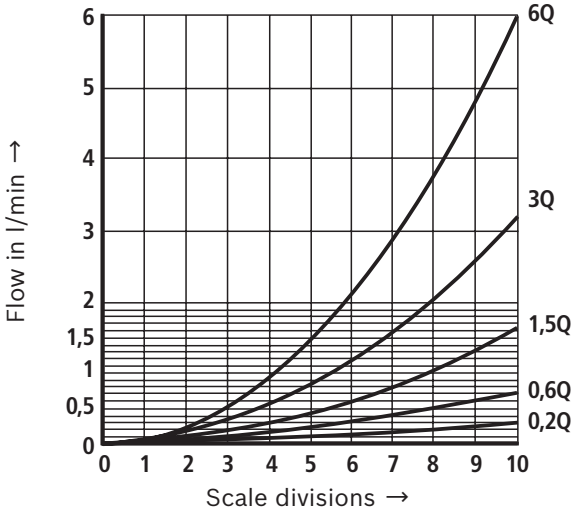

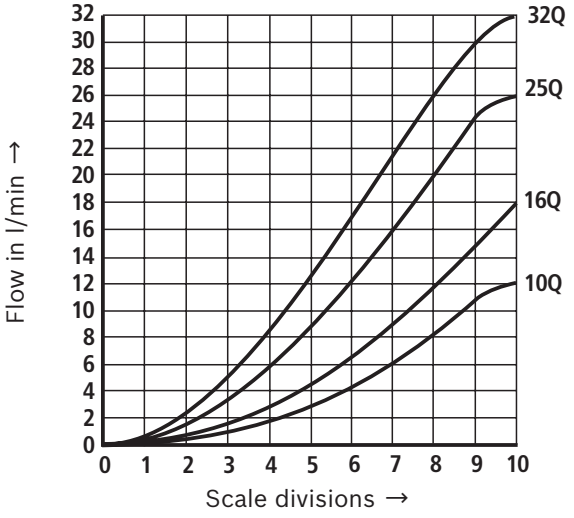

Characteristic curves
(measured with HLP46, ϑ_{Oil} = 40 ± 5 °C)

***Δp*-*q*$_V$ characteristic curve** via check valve B → A; orifice closed

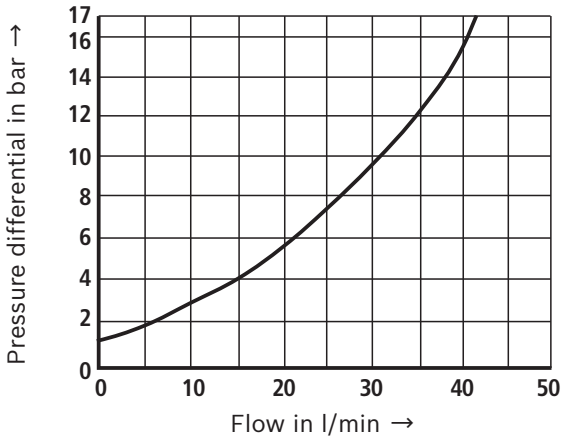

***p*$_E$-*q*$_V$ characteristic curve**

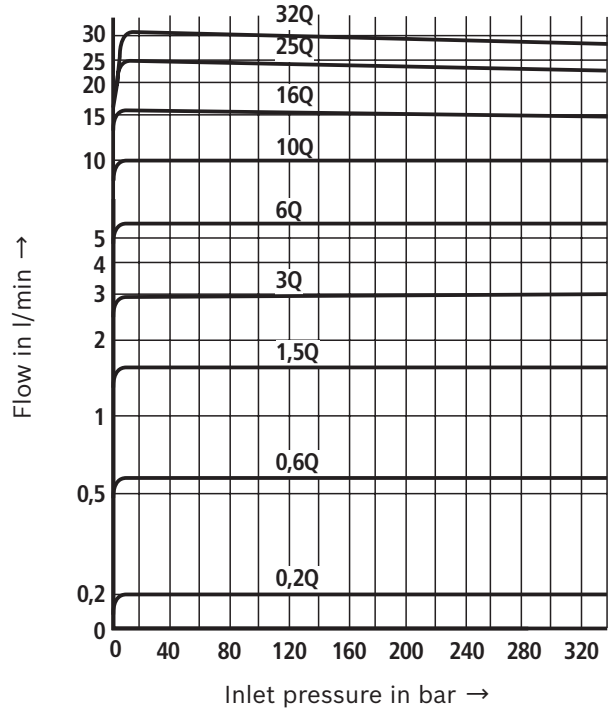

Temperature dependency at ***Δp*** = 20 bar

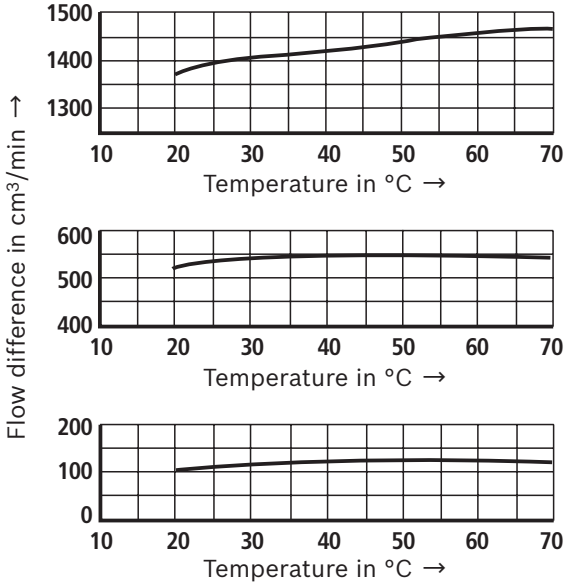

Rectifier sandwich plate
***Δp*-*q*$_V$ characteristic curve**

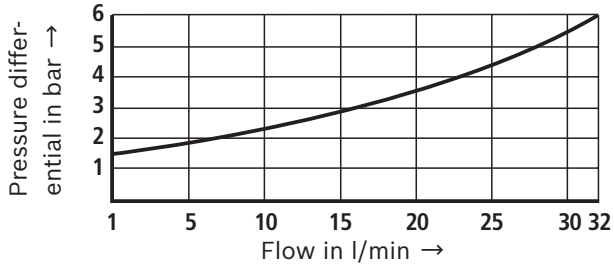

Dimensions: Subplate mounting – version "A" and "B"
(dimensions in mm)

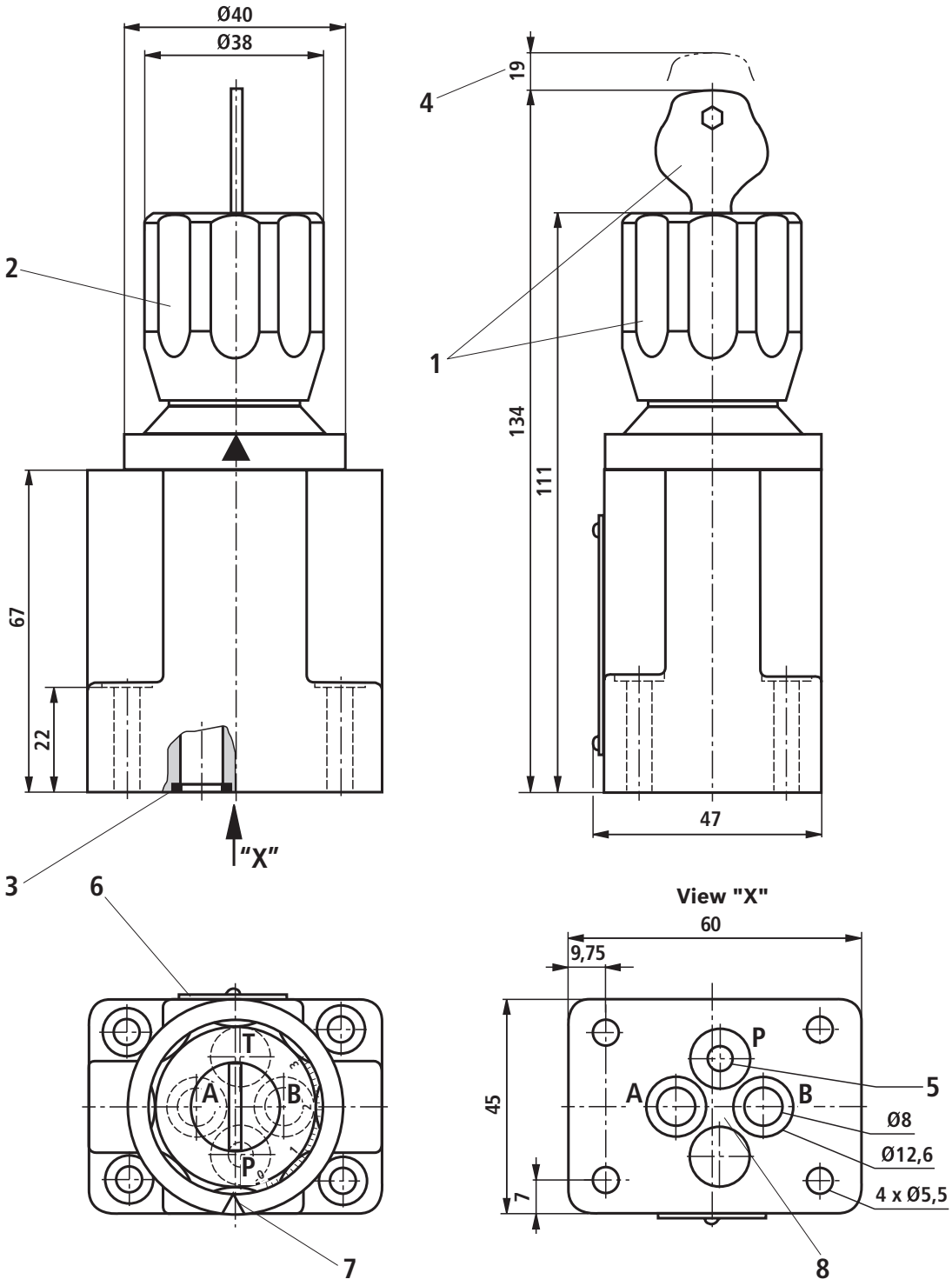

Item explanations, subplates, and valve mounting screws see page 12.

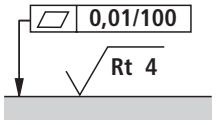

Required surface quality of the valve contact surface

Dimensions: Threaded connection for control panel installation – version "SB" (dimensions in mm)

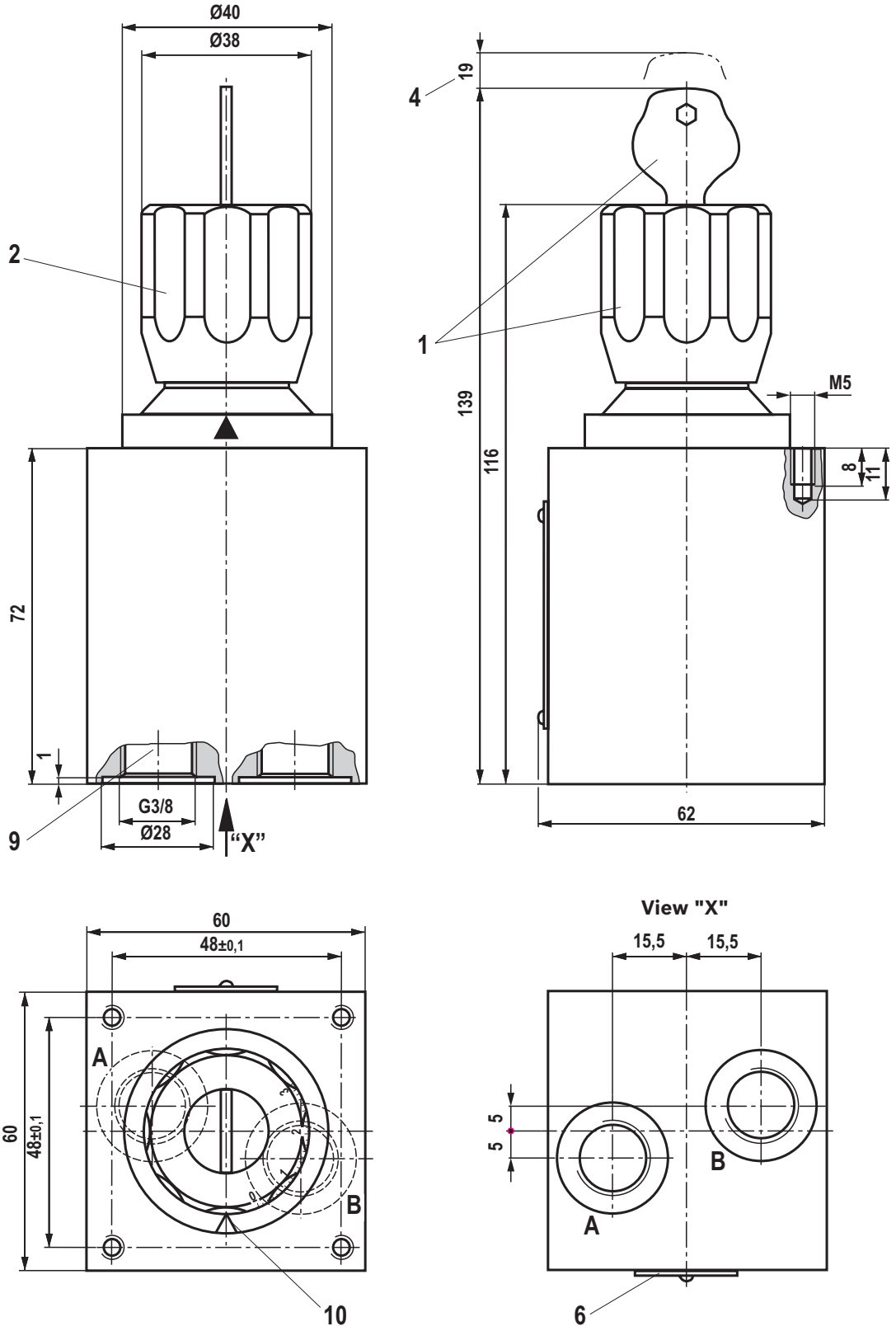

Item explanations and valve mounting screws see page 12.

Dimensions: Adapter plate HSE 05 G06A001-3X/V00
(dimensions in mm)

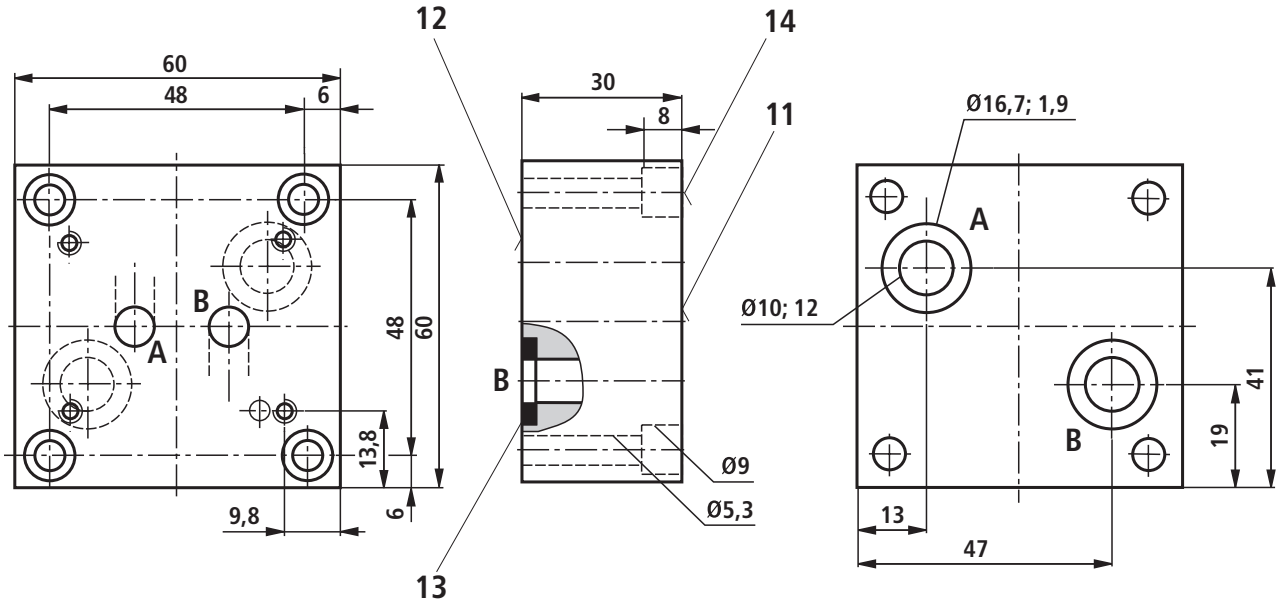

Notice:
The adapter plate (material no. **R900496121**) is required for mounting a flow control valve type 2FRM 6 B..-3X/.. to an existing flow control valve type 2FRM 5 -3X/...

Dimensions

1. Adjustment type "3" (lockable rotary knob with scale)
2. Adjustment type "7" (rotary knob with scale)
3. Identical seal rings for ports A, B, P, and T
4. Space required to remove the key
5. Ø3 bore in version "B" not bored (without external closing)
6. Name plate
7. Position of the marking at port P
8. Porting pattern according to DIN 24340 form A
9. Connection thread G3/8 according to ISO 228-1
10. Position of the marking vis-à-vis name plate
11. Connection surface for flow control valve type 2FRM 6
12. Connection surface for flow control valve type 2FRM 5
13. Seal ring
14. Mounting bolts for adapter plate (included in the scope of delivery)
    4 hexagon socket head cap screws
    ISO 4762 - M5 x 30 - 10.9-flZn-240h-L
    (friction coefficient μ_{total} = 0.09 ... 0.14);
    tightening torque M_A = 7 Nm ± 10 %

Control panel installation (version "SB"):

Valve mounting screws (separate order)
4 hexagon socket head cap screws
ISO 4762 - M5 - 8.8-flZn-240h-L
(friction coefficient μ_{total} = 0.09 ... 0.14);
tightening torque M_A = 7 Nm ± 10 %,
(minimum useable thread depth = 6.5 mm)

Subplate mounting (version "A" and "B"):

Subplates according to data sheet 45052 (separate order)
Type G 341/01 (G1/4)
Type G 342/01 (G3/8)
Type G 502/01 (G1/2)

Valve mounting screws (separate order)

- Without rectifier sandwich plate
  4 hexagon socket head cap screws
  ISO 4762 - M5 x 30 - 10.9-flZn-240h-L
  (friction coefficient μ_{total} = 0.09 ... 0.14);
  tightening torque M_A = 7 Nm ± 10 %,
  material no. **R913000316**

- With rectifier sandwich plate
  4 hexagon socket head cap screws
  ISO 4762 - M5 x 70 - 10.9-flZn-240h-L
  (friction coefficient μ_{total} = 0.09 ... 0.14);
  tightening torque M_A = 7 Nm ± 10 %,
  material no. **R913000325**

Dimensions: Rectifier sandwich plate type Z4S 6-1X/V
(dimensions in mm)

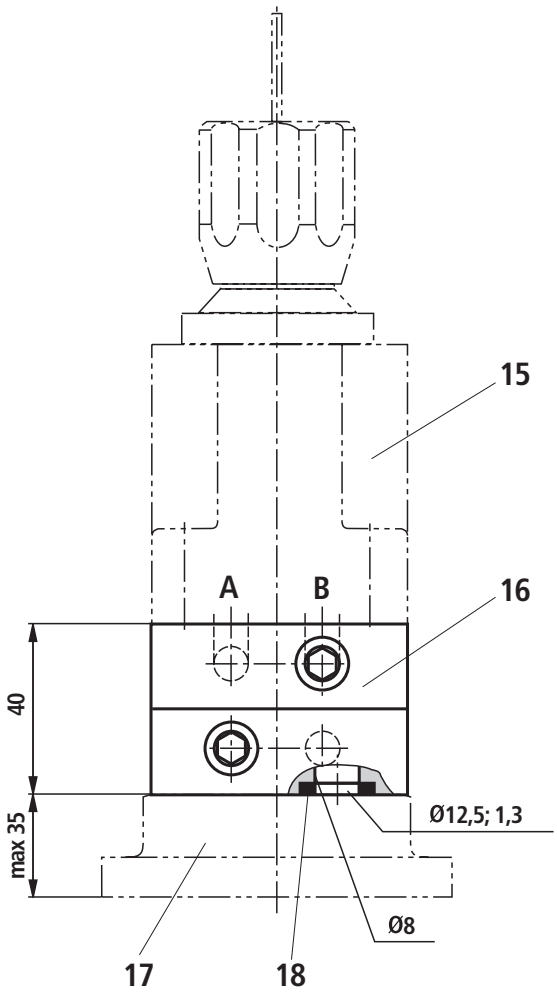

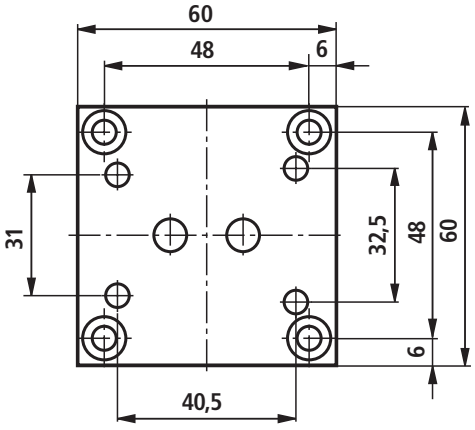

Notice:
The rectifier sandwich plate Type Z4S 6 -1X/V can **only** be used in connection with the flow control valve Type 2FRM 6 **B**..-3X/.. (without closing of the pressure compensator)!

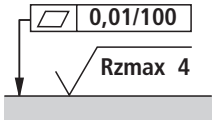

Required surface quality of the valve contact surface

15 2-way flow control valve
16 Rectifier sandwich plate
17 Subplate according to data sheet 45052 and valve mounting screws see page 12.
18 Seal ring

Additional information

▶ Subplates	Data sheet 45052
▶ Hydraulic fluids on mineral oil basis	Data sheet 90220
▶ Environmentally compatible hydraulic fluids	Data sheet 90221
▶ Flame-resistant, water-free hydraulic fluids	Data sheet 90222
▶ Flame-resistant hydraulic fluids - containing water (HFAE, HFAS, HFB, HFC)	Data sheet 90223
▶ Hydraulic valves for industrial applications	Operating instructions 07600-B
▶ General product information on hydraulic products	Data sheet 07008
▶ Assembly, commissioning and maintenance of industrial valves	Data sheet 07300
▶ Selection of the filters	www.boschrexroth.com/filter

Bosch Rexroth AG
Hydraulics
Zum Eisengießer 1
97816 Lohr am Main, Germany
Phone +49 (0) 93 52/18-0
documentation@boschrexroth.de
www.boschrexroth.de

Notes

Bosch Rexroth AG
Hydraulics
Zum Eisengießer 1
97816 Lohr am Main, Germany
Phone +49 (0) 93 52 / 18-0
documentation@boschrexroth.de
www.boschrexroth.de

Notes